Rosyth School
End-of-Year Examination 2019
Mathematics
Primary 3

Total 80

Name: _____

Class: Pr 3 -_____ Register No. _____ Duration: 1 h 45 min

Date: 31 October 2019 Parent's Signature:

Instructions to Pupils:

1. Do not turn over this page until you are told to do so.
2. Follow all instructions carefully.
3. This paper consists of 3 parts, Sections A, B and C.
4. For questions 1 to 15 in Section A, shade the correct ovals on the Optical Answer Sheet (OAS).
5. ANSWER ALL THE QUESTIONS.

	Maximum Marks	Marks Obtained
Section A	25	
Section B	35	
Section C	20	
Total	80	

* This paper consists of 20 printed pages altogether (including the cover page).

www.TestPapersFree.com

www.TestPapersFree.com

Section A

Questions 1 to 5 carry 1 mark each and Questions 6 to 15 carry 2 marks each. For questions 1 to 15, four options are given. One of them is the correct answer. Make your choice (1, 2, 3 or 4). Shade the correct ovals (1, 2, 3 or 4) onto the Optical Answer Sheet provided.

(25 marks)

---

1. In 7438, the digit 7 is in the _____ place.
   (1) ones
   (2) tens
   (3) hundreds
   (4) thousands

2. 6 hundreds and 3 tens is _____.
   (1) 603
   (2) 630
   (3) 6003
   (4) 6030

3. Find the product of 6 and 8.
   (1) 14
   (2) 2
   (3) 42
   (4) 48

4. 6 km 8 m is the same as _____ m.
   (1) 68
   (2) 608
   (3) 6008
   (4) 6800

www.TestPapersFree.com

5. What is the time shown on the clock?

(1) 15 minutes to 9
(2) 15 minutes past 9
(3) 15 minutes to 10
(4) 15 minutes past 10

6. Complete the number pattern.

7943 , 7923 , 7903 , ? , 7863

(1) 7843
(2) 7883
(3) 7923
(4) 7983

7. Jayrus collected 1140 game cards.
He collected 250 more game cards than Brayden.
How many game cards does Brayden have?

(1) 890
(2) 910
(3) 990
(4) 1390

www.TestPapersFree.com

8. What is the quotient when 535 is divided by 5?

(1) 17
(2) 107
(3) 137
(4) 170

9. What is the value of 108 x 7?

(1) 115
(2) 156
(3) 715
(4) 756

10. Find the mass of the chicken.

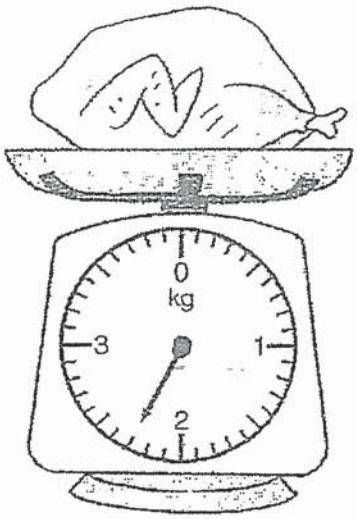

(1) 203 g
(2) 230 g
(3) 2030 g
(4) 2300 g

www.TestPapersFree.com

11. Study the pattern below carefully.

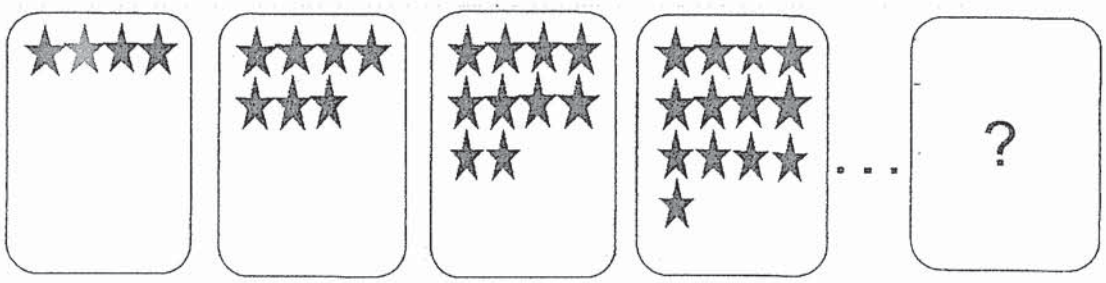

Pattern 1 Pattern 2 Pattern 3 Pattern 4 . . . Pattern 7

How many stars are there in Pattern 7?

(1) 14
(2) 16
(3) 22
(4) 28

12. Find the difference between the values of the digit 2 in 2043 and 4320.

(1) 1800
(2) 1980
(3) 2277
(4) 4020

13. The total cost of a handbag and a wallet is $960.
The handbag costs 3 times as much as the wallet.
Find the cost of the handbag.

(1) $240
(2) $320
(3) $630
(4) $720

www.TestPapersFree.com

14. Which is the greatest fraction?

(1) $\frac{1}{2}$

(2) $\frac{2}{3}$

(3) $\frac{5}{6}$

(4) $\frac{7}{12}$

15. $\frac{1}{5} + \frac{3}{10} =$ _____

(1) $\frac{1}{2}$

(2) $\frac{4}{5}$

(3) $\frac{4}{10}$

(4) $\frac{4}{15}$

www.TestPapersFree.com

Section B

Questions **16** to **20** carry 1 mark each and Questions **21** to **35** carry 2 marks each. Show your working clearly in the space provided for each question and write your answers in the spaces provided. For questions which require units, give your answers in the units stated.

(35 marks)

All diagrams in this paper are not drawn to scale unless stated otherwise.

Do not write in this space

16. Write 4 thousands, 2 tens and 7 ones in numerals.

Ans: _____

17. What number is 480 less than 8040?

Ans: _____

18. Find the missing numerator.

$$\frac{3}{4} = \frac{?}{12}$$

Ans: _____

www.TestPapersFree.com

19. Find the volume of water in the cylinder below.

Ans: _____ ml

Do not write in this space

20. Express 1850¢ in dollars and cents.

Ans: $ _____

(Go on to the next page)

www.TestPapersFree.com

21. Find the missing digit A.

Do not write in this space

$$\begin{array}{rrrr} & 6 & \boxed{A} & 0 \\ - & 3 & 1 & 9 \\ \hline & 3 & 2 & 1 \\ \hline \end{array}$$

Ans: _____

22. 1046 girls and 1375 boys took part in a competition.
How many children took part in the competition?

Ans: _____

(Go on to the next page)

www.TestPapersFree.com

The graph below shows the number of books borrowed by the Primary 3 students from Gardens Primary School. Use the graph to answer Questions 23 and 24.

Do not write in this space

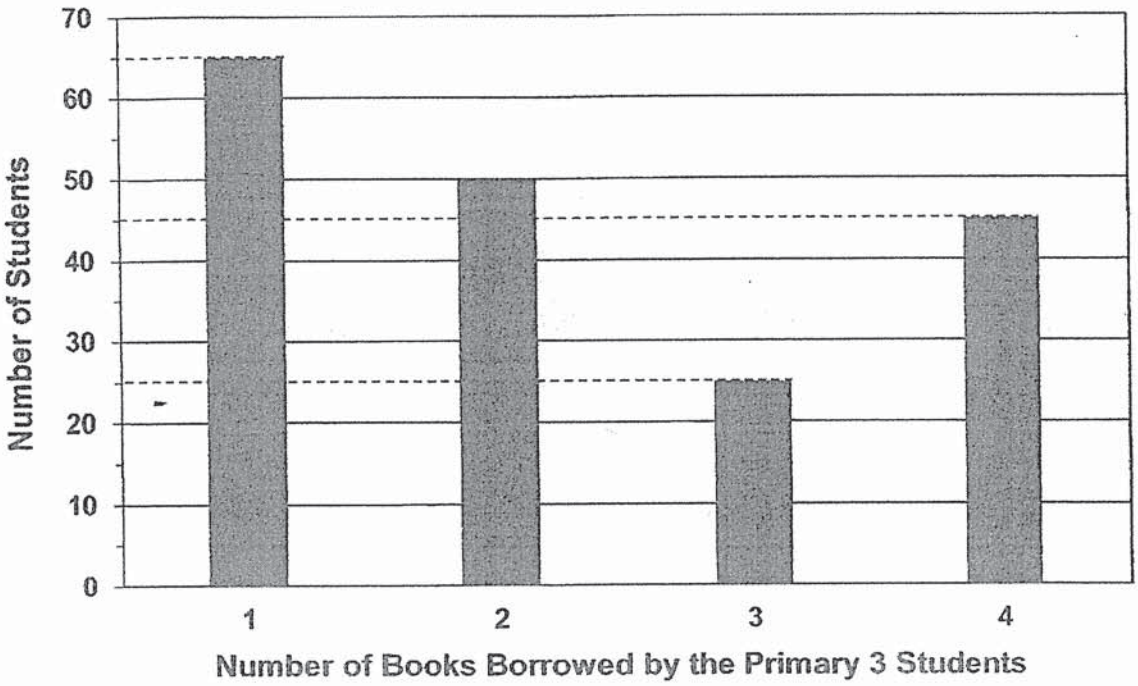

23. How many students borrowed more than 2 books?

Ans: _____

24. There are 200 Primary 3 students in the school. How many Primary 3 students did not borrow any books?

Ans: _____

(Go on to the next page)

www.TestPapersFree.com

25. Carol started doing her homework at 7.50 p.m. She finished it at 9.05 p.m.
How long did she take to complete her homework?

Do not write in this space

Ans: _____ min

26. Mr Tan watched a movie for 1 h 30 min in the afternoon.
When the movie ended, he saw the time on the clock as shown below.
What time did the movie start?

Ans: _____ p.m.

27. The difference between 2 numbers is 54.
If the smaller number is 18, what is the greater number?

Ans: _____

(Go on to the next page)

www.TestPapersFree.com

28. Form the smallest 4-digit odd number using the following digits.
You are not allowed to use each digit more than once.

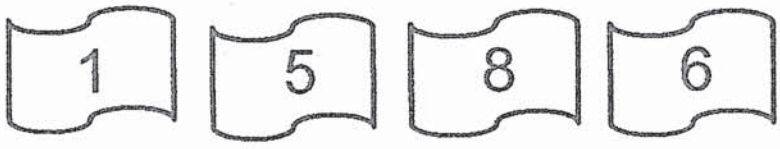

Do not write in this space

Ans: _____

29. There were 18 girls and 19 boys in a class.
Each of them made 3 paper masks.
How many paper masks did they make altogether?

Ans: _____

30. A fruit seller had 8 boxes of oranges. There were 24 oranges in each box.
He repacked all the oranges into bags of 6. How many bags would he have?

Ans: _____

(Go on to the next page)

www.TestPapersFree.com

31. Arrange the following fractions in order. Begin with the smallest.

$$\frac{1}{2}\ ,\ \frac{5}{6}\ ,\ \frac{5}{12}$$

Do not write in this space

Answer: _____ , _____ , _____
smallest

(Go on to the next page)

www.TestPapersFree.com

32. Study the diagram below.

Do not write in this space

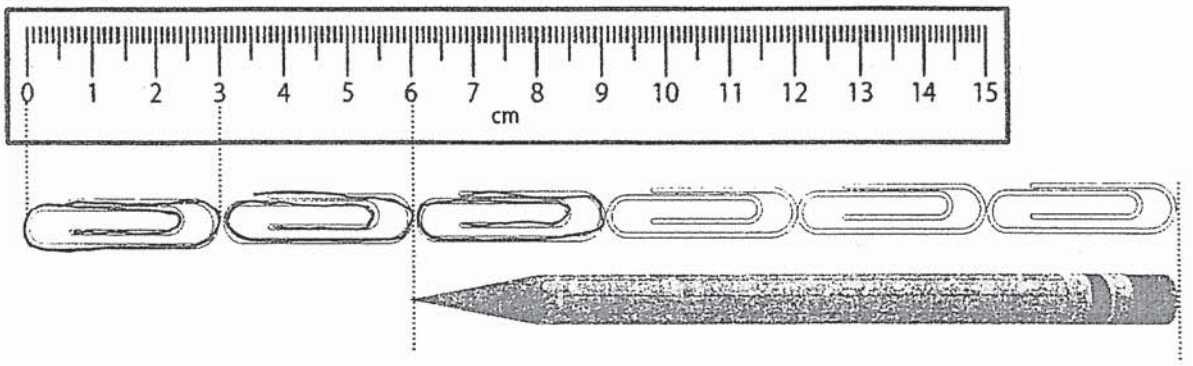

Find the length of the pencil.

Ans: _____ cm

33. The diagram below shows Square X and Square Y. Find the area of Square Y.

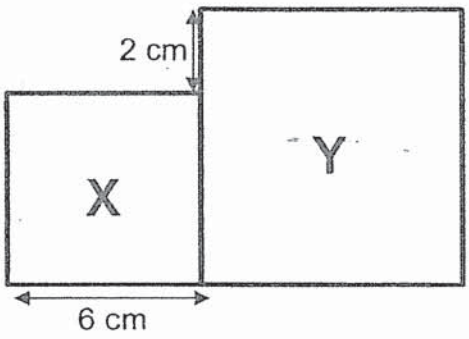

Ans: _____ cm^2

(Go on to the next page)

www.TestPapersFree.com

Do not write in this space

34. Study the figure below.

a) Name a line parallel to AB.

b) Name a line perpendicular to CD.

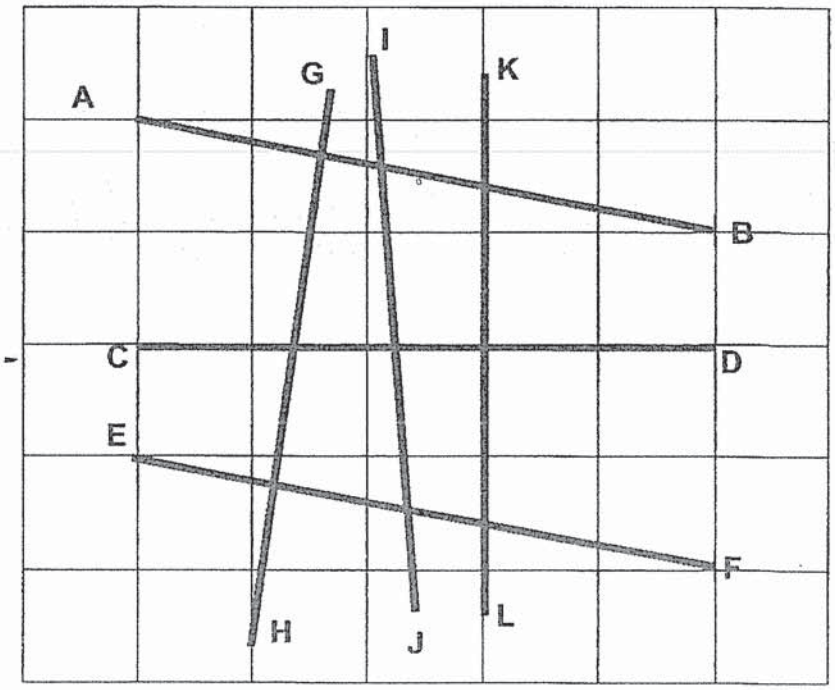

Ans: (a) Line _____

(b) Line _____

35. David drew the shape below.
The shape has 6 angles.
How many of these angles are greater than a right angle?

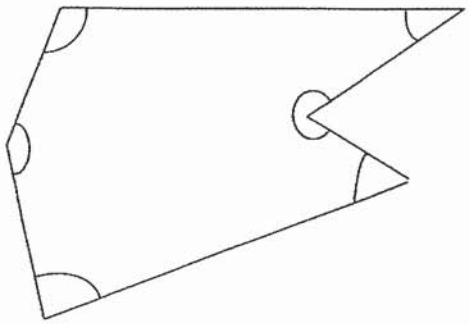

Ans: _____

(Go on to the next page)

www.TestPapersFree.com

Section C

For Questions **36** to **40**, each question carries 4 marks. Show your working clearly in the space provided for each question and write your answers in the spaces provided. For questions which require units, give your answers in the units stated.

All diagrams in this paper are not drawn to scale unless stated otherwise.

(20 marks)

Do not write in this space

36. The total mass of a basket and 3 similar balls is 2090 g.

The total mass of the same basket and 1 similar ball is 1150 g.

Find the mass of 1 ball.

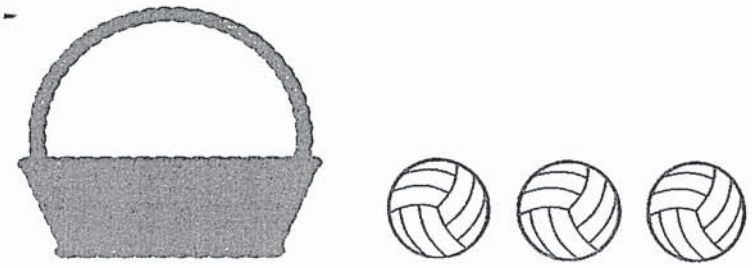

Ans: _____ [4]

(Go on to the next page)

www.TestPapersFree.com

37. A pencil cost $1.55.

A notebook cost $0.85 more than the pencil.

Sam bought a notebook and gave the cashier a $5 note.

How much change did he receive?

Do not write in this space

Ans: _____ [4]

(Go on to the next page)

www.TestPapersFree.com

38. A swimming pool is 50 m long and 30 m wide.
John walked 2 times around the swimming pool.
Find the distance he walked.

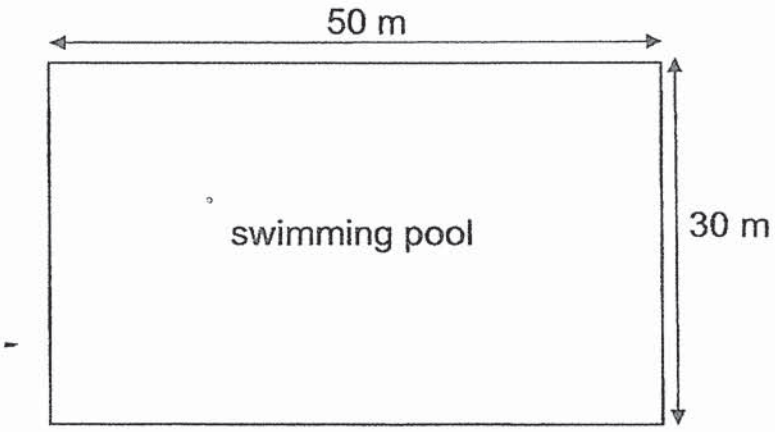

Do not write in this space

Ans: _____ [4]

(Go on to the next page)

www.TestPapersFree.com

39. Jude had 468 stickers and Nathan had 348 stickers.
How many stickers must Jude give to Nathan so that each of them has an equal number of stickers?

Do not write in this space

Ans: _____ [4]

(Go on to the next page)

www.TestPapersFree.com

40. Lamp posts are built along the road at an equal distance away from one another in a straight line. The distance between the 1st lamp post and 6th lamp post is 30 m. What is the distance from the 1st lamp post to the 25th lamp post?

Do not write in this space

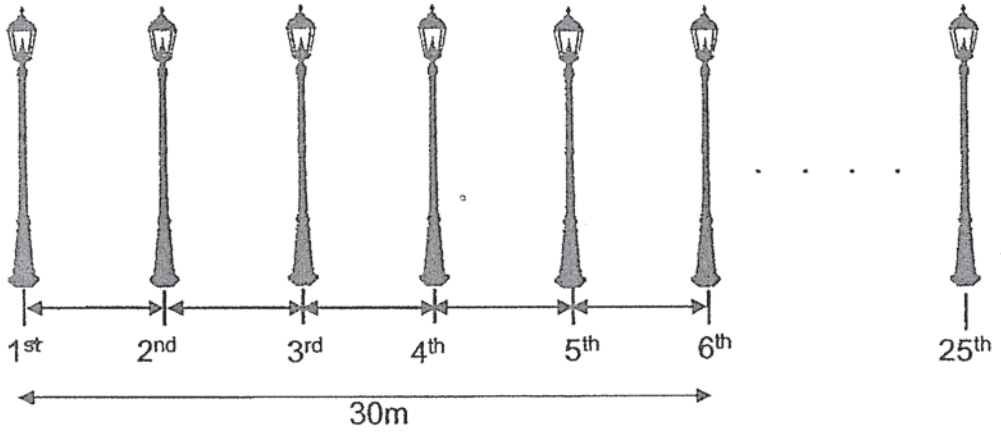

Ans: _____ [4]

End of Paper

www.TestPapersFree.com

www.TestPapersFree.com

ANSWER KEY

YEAR : 2019
LEVEL : PRIMARY 3
SCHOOL : ROSYTH SCHOOL
SUBJECT : MATHEMATICS
TERM : EOY

Delivery: 98518229, 98518226, 81612644, 93837586

SECTION A

Q1) 4	Q2) 2	Q3) 4	Q4) 3	Q5) 3	Q6) 2	Q7) 1	Q8) 2	Q9) 4	Q10) 4
Q11) 3	Q12) 2	Q13) 4	Q14) 3	Q15) 1					

SECTION B

Q16 4027

Q17 7560

Q18 9

Q19 250ml

Q20 $18.50

Q21 4

Q22 2421

Q 70

Q 15

Q25 1h 15min

Q26 12.20p.m.

Q27 72

Q28 1685

Q29 111

www.TestPapersFree.com

Q30 32

Q31 $\frac{5}{12}, \frac{1}{2}, \frac{5}{6}$

Q32 12cm

Q33 $64cm^2$

Q34 (a) Line EF

(b) Line KL

Q35 3

Q36 470g

Q37 $2.60

Q38 320m

Q39 60

Q40 144m

www.TestPapersFree.com